NARROW STYLES

ENTRANCE DOORS

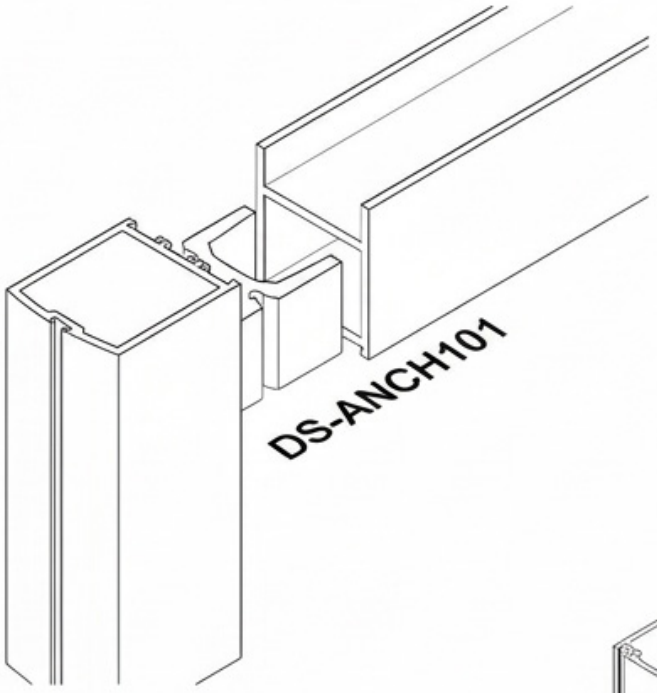

Joint of Door Stile
& 2" Top Rail
(Double Mohair)

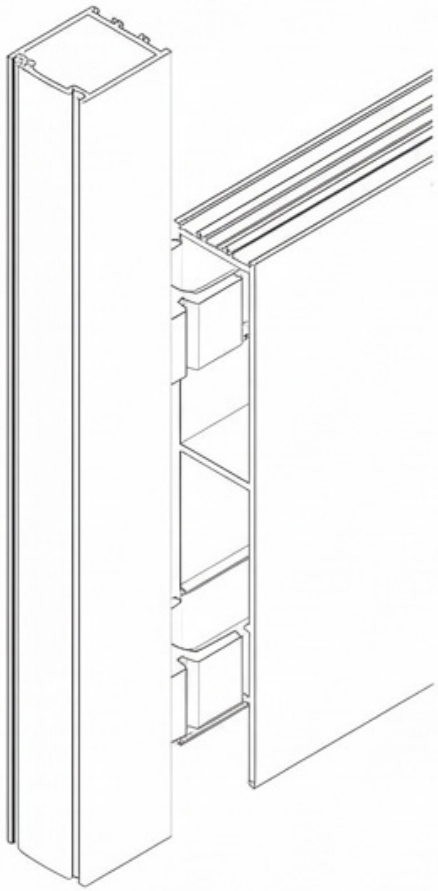

Joint of Door Stile
& 10" Bottom Rail

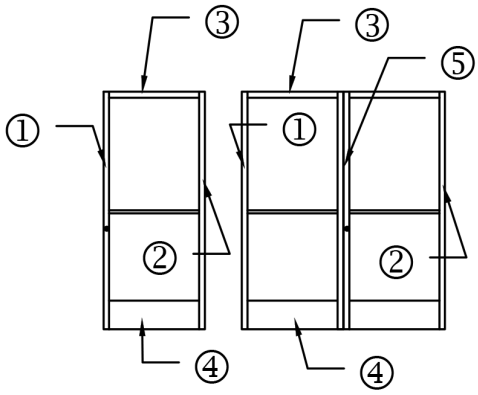

Optional Glass Stop for ¼" or 1" Glass

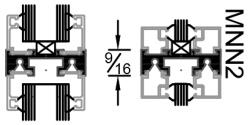

Optional Muntin (9/16" up to 10")

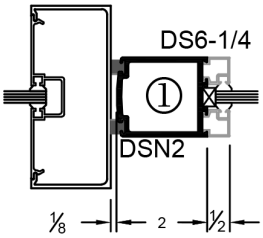

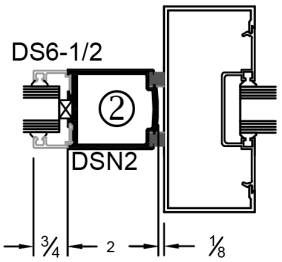

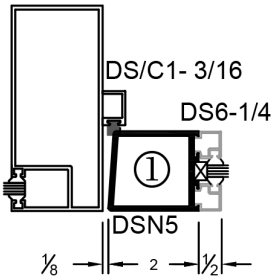

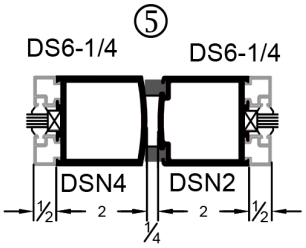

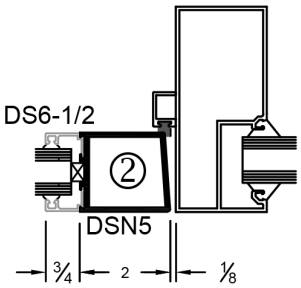

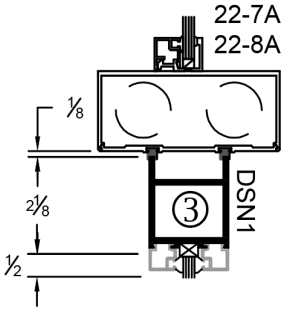

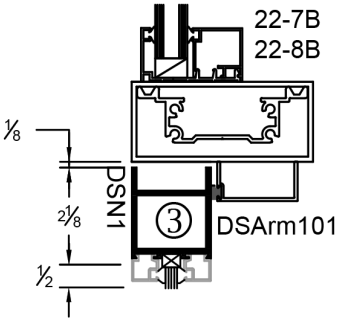

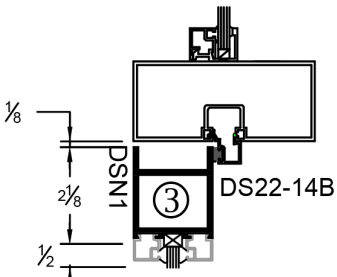

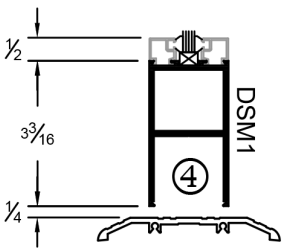

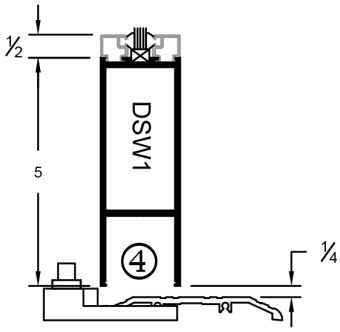

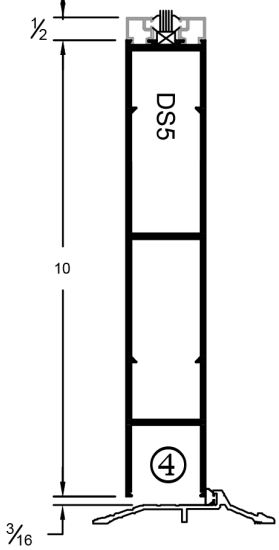

HARDWARE SOLUTIONS LLC
1690 W Frontage Rd, Chula Vista, CA 91911
Direct: **(619) 737-9999** | Text: **(619) 796-6088**
Email: **info@glahs.com** | **www.hardwaresolutions.com**

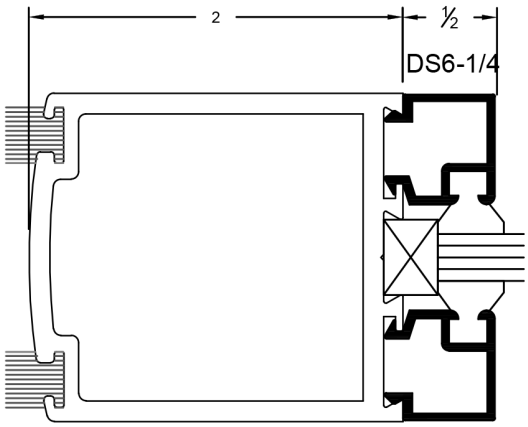

¼" Glass Stop & Stile

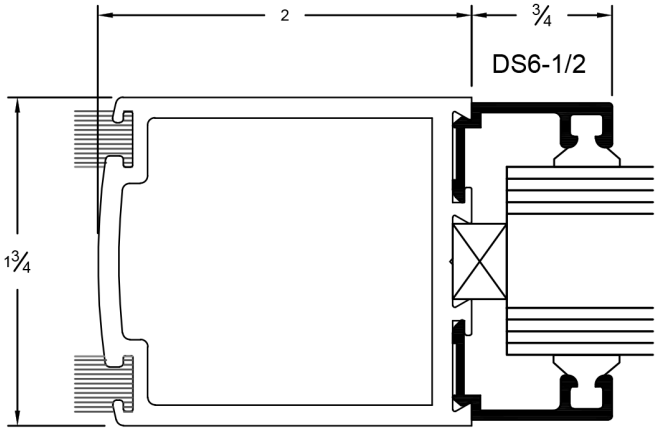

1" Glass Stop & Stile

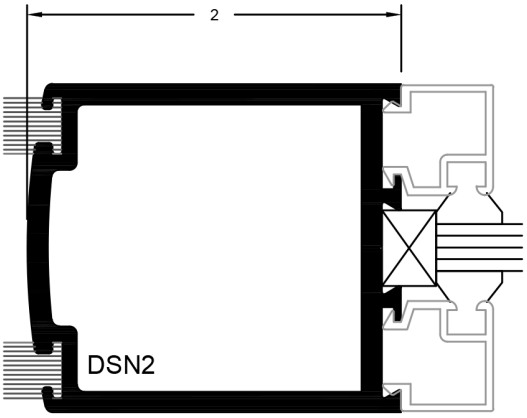

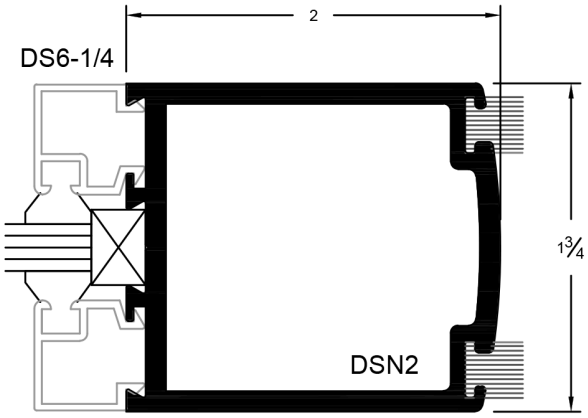

Center Hung, Single Door

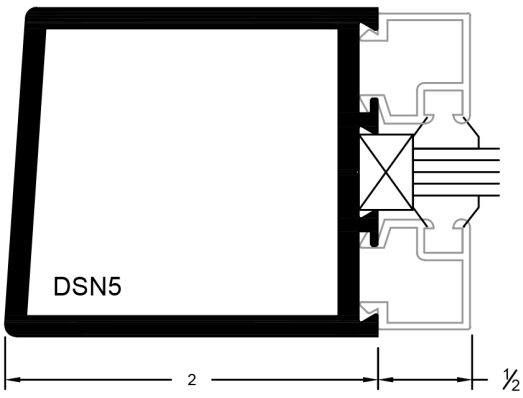

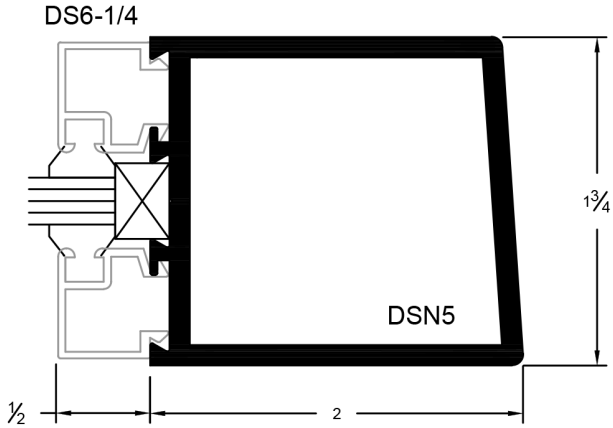

Offset Hung, Single Door

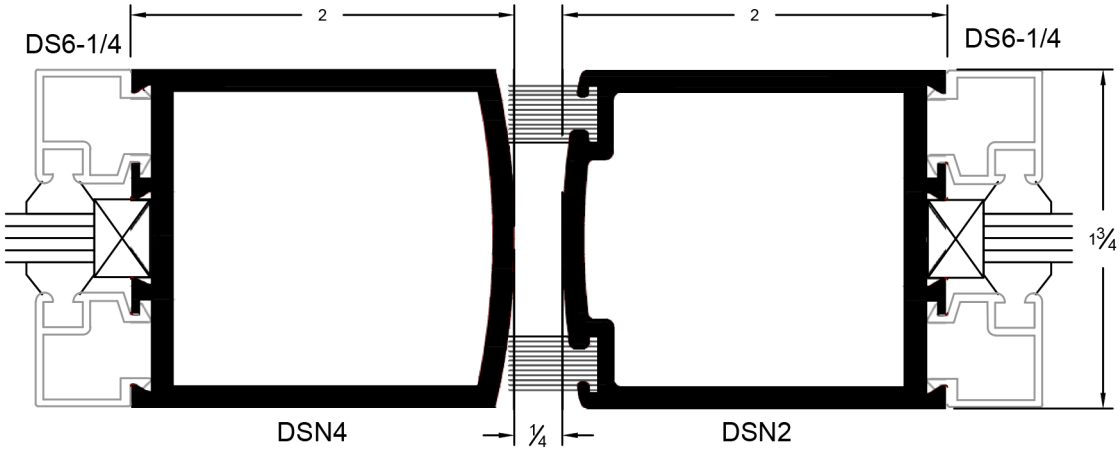

Meeting For Center / Offset Door

(Double Mohair)

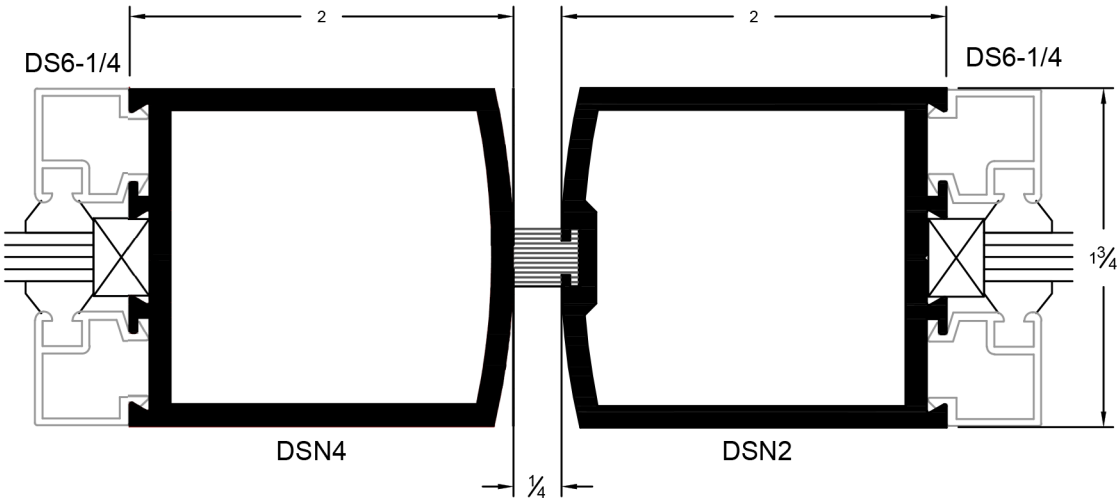

Meeting For Center / Offset Door

(Single Mohair)

HARDWARE SOLUTIONS LLC
1690 W Frontage Rd, Chula Vista, CA 91911
Direct: (619) 737-9999 | Text: (619) 796-6088
Email: info@glahs.com | www.hardwaresolutions.com

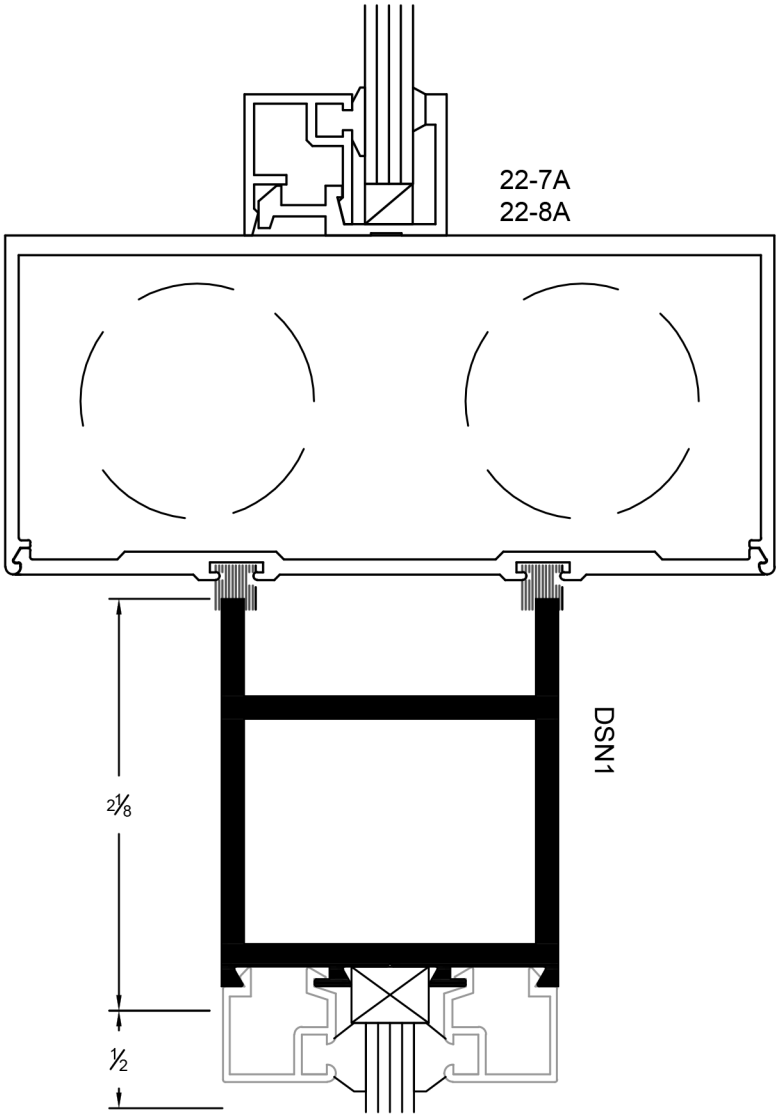

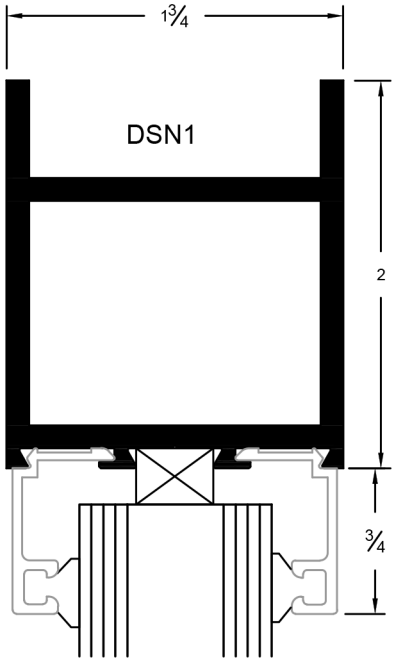

Top Rail

Bottom Rails

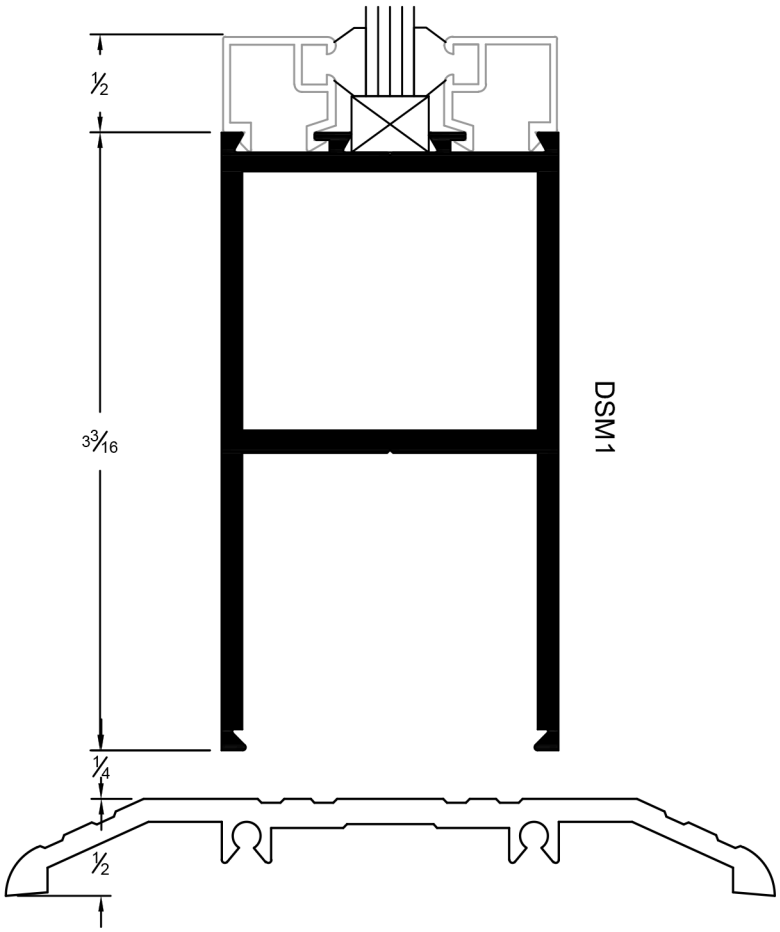

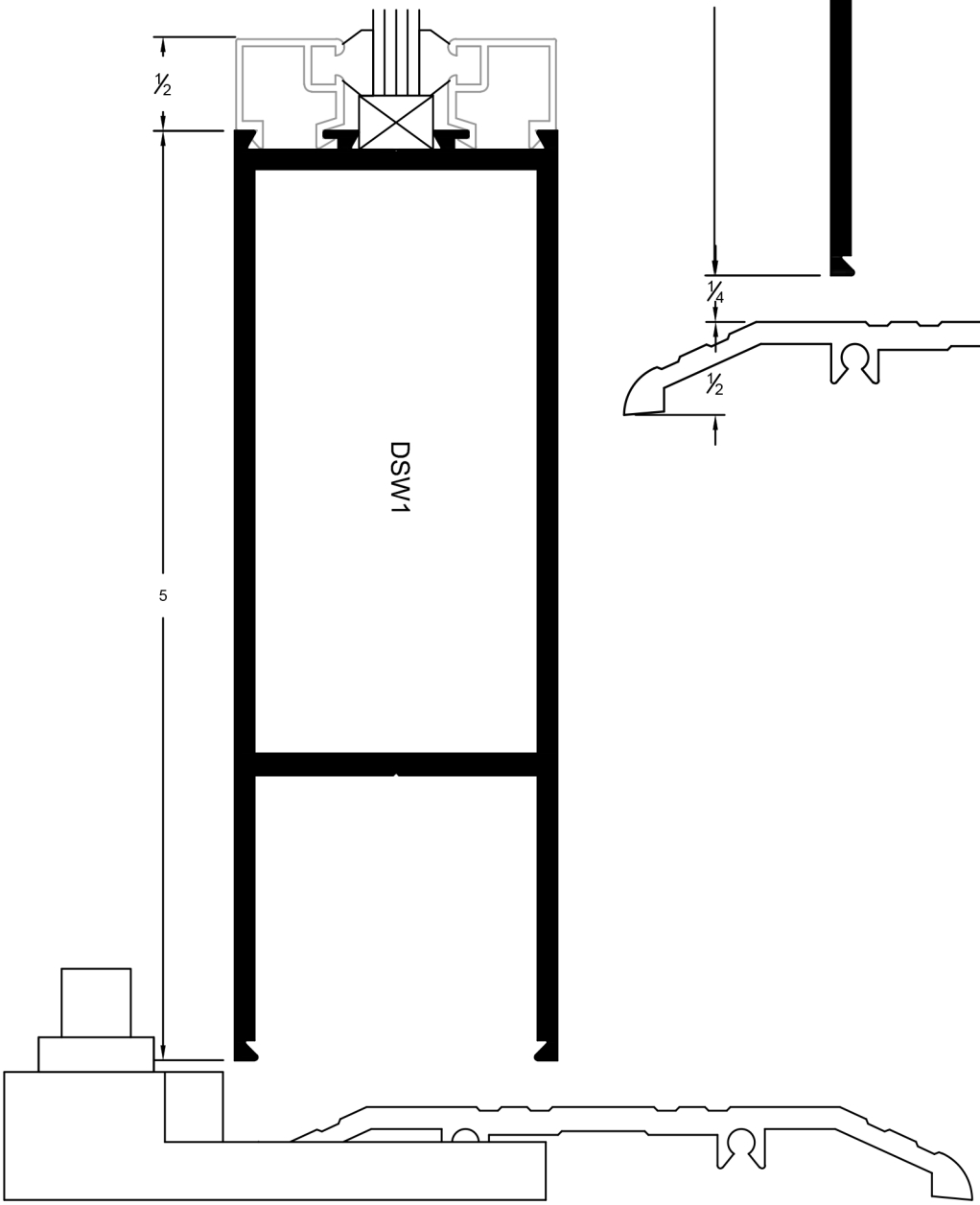

HARDWARE SOLUTIONS LLC
1690 W Frontage Rd, Chula Vista, CA 91911
Direct: **(619) 737-9999** | Text: **(619) 796-6088**
Email: **info@glahs.com** | **www.hardwaresolutions.com**

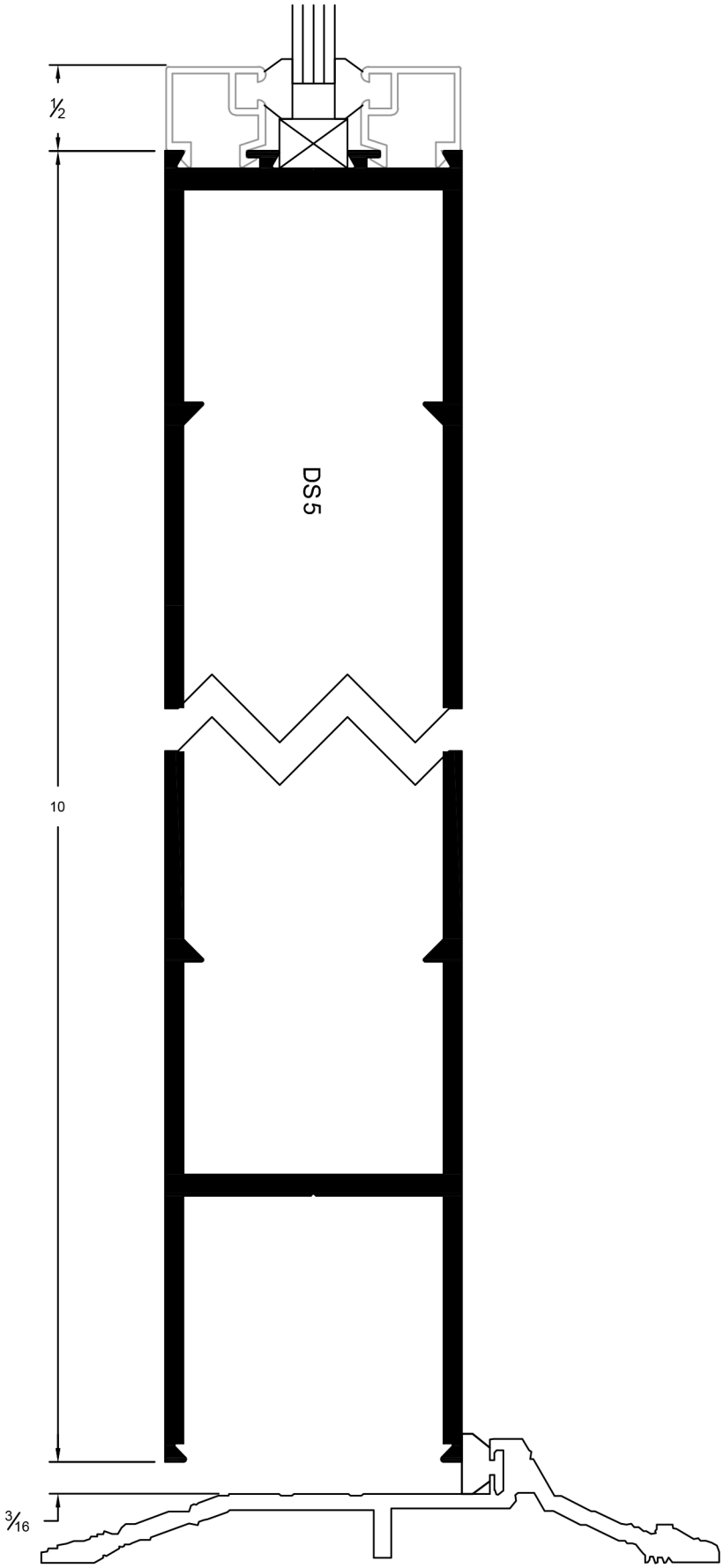
½
DS5
10
3/16